8. Exploded Views and Parts List

8-1. Main Assembly . . . . . page(8-2)

8-2. Frame Unit Assembly . . . . . page(8-4)

8-3. Drive Unit Assembly . . . . . page(8-7)

8-4. Cassette Unit Assembly . . . . . page(8-8)

8-5. Fuser Unit Assembly(ML-1710P) . . . . . page(8-10)

- Deal drawings and service parts are declared for the items with higher rate of inferiority and replaceable in the level of service description only.
- If inferiority occurs, you can replace the parts by the unit declared in deal drawings and service items.

Way to observe Part Code & Description

Part code and Description is quoted and controlled by determined standard. Refer to this determined standard, it will help with ordering Part.

- **There are two kinds of Part code inscription type.**

●●●●–●●●●●● ex) 2007-007961 R-CHIP

■■●●–●●●●●■ ex) JB96-01268A ELA UNIT-COVER TOP

└ It shows part specific

(● : figure, ■ : character (alphabet))

Type 1 : Controlled by Company : It can be commonly used for all kinds of product SEC produce. Mostly, electronics Parts.

Type 2 : Controlled by Division : It is used or one produce. Mostly, Mostly, mechanical Parts.

- **A/S privately used part :** It is only used for A/S .
- **Ass'y part :** Assembled by more than 2 Parts. If necessary part is not A/S Part, Ass'y part including necessary par can be used. It is shown in the diagram and drawing of SVC manual.
- Ass'y part and A/S privately used Part is distinguished by part Code and Description. The are inscription type 2. It is recognized by Part character and front side of description.

DIVISION	PART CODE	DESCRIPTION
A/S Private	**81-****** (JB81-00039A)	AS-***** (AS-USE)
ASS'Y Part	**75-****** (JB75-00068A)	MEC-***** (MEC-CHUTE)
ASS'Y Part	**92-****** (JB92-01131A)	PBA ****** (PBA MAIN-CONTROLLER)
ASS'Y Part	**97-****** (JB97-01089A)	MEA ****** (MEA UNIT-PULLEY IDLE)

IT-Spares.eu

8.1 Main Assembly

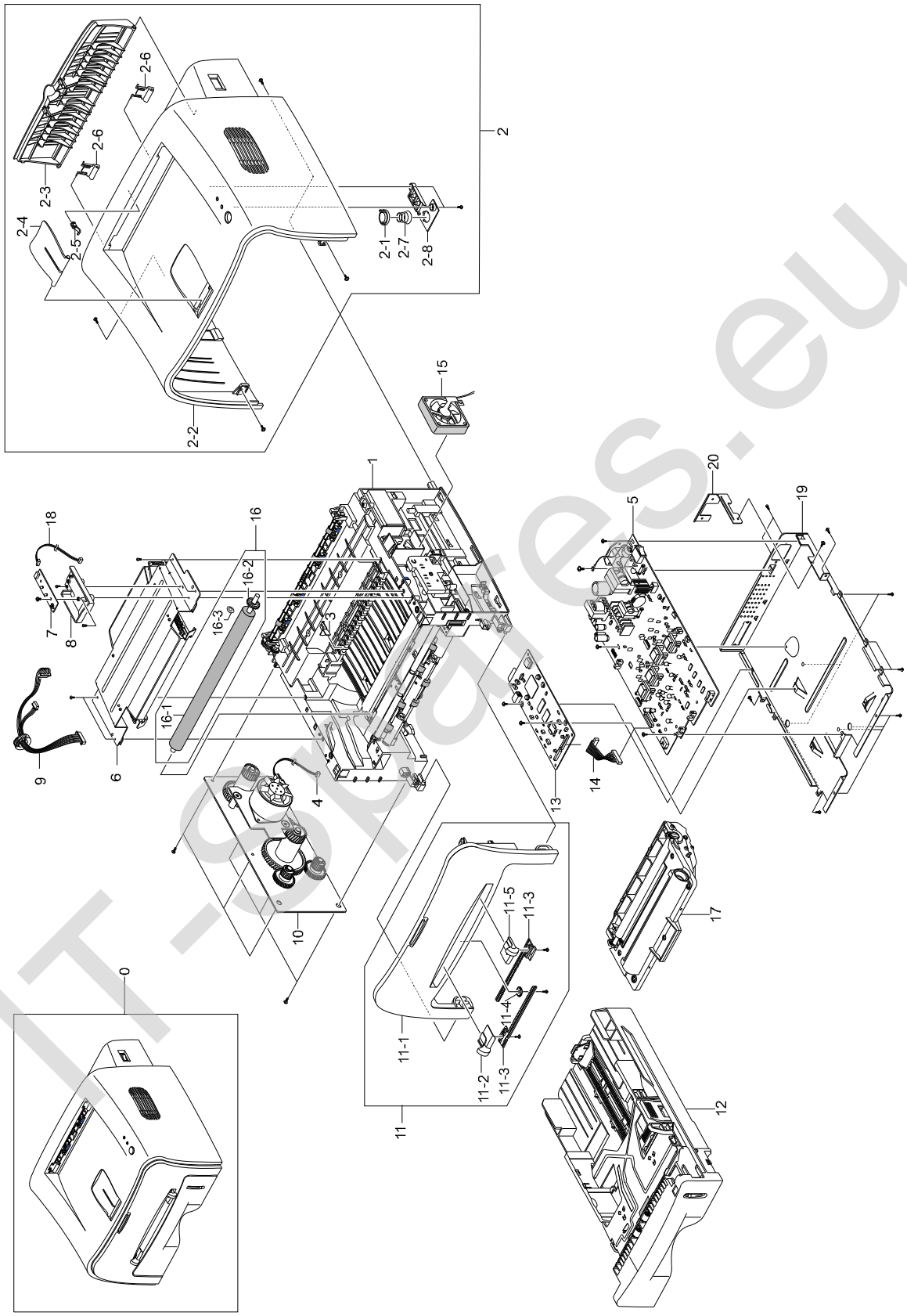

IT-spares.eu

Main Assembly Parts List

SA : Service Available
O : Service available **X** : Service not available

No.	Description	SEC.Code	Q'ty	SA	Remark
0	ML-1710P				
1	ELA UNIT-FRAME LOWER, 220V	JC96-02734A	1	O	ML-1710P
2	MEA UNIT-COVER TOP	JC97-01748Q	1	O	ML-1710P
2-1	LENS LED-M-LED	JC67-00026A	1	O	
2-2	COVER-M-TOP	JC63-00304G	1	O	ML-1710P
2-3	COVER-M-REAR	JC63-00101A	1	O	
2-4	PMO-STACKER_RX	JC72-00973A	1	O	
2-5	PMO-BUSHING_F/DOWN	*	1	X	
2-6	PMO-SUB STACKER	JC72-01001A	2	O	
2-7	SPRING-CS	6107-001169	1	O	
2-8	KEY-M-ON LINE	JC64-00039A	1	O	
3	PLATE-P-CHANNEL	JC61-00606A	1	O	
4	CBF HARNESS-MOTOR	JC39-00241A	1	O	
5	SMPS- V2(XEU)	JC44-00047A	1	O	220V
6	UNIT-HUMMINGBIRD LSU	JC59-00018A	1	O	
7	PBA MAIN-PANEL	JC92-01439A	1	O	
8	COVER PCB-M-PCB	JC63-00104A	1	O	
9	CBF HARNESS-LSU	JC39-00242A	1	O	
10	ELA UNIT-RX DRIVE	JC96-02733A	1	O	
11	MEA UNIT-COVER FRONT	JC97-01746A	1	O	ML-1710P
11-1	COVER-M-FRONT	JC63-00103A	1	O	ML-1710P
11-2	ADJUST-M-MANUAL_L	JC70-00302A	1	O	
11-3	ADJUST RACK-M-MANUAL	JC70-00304A	2	O	
11-4	GEAR-RACK_PINION	JC66-00387A	1	O	
11-5	ADJUST-M-MANUAL_R	JC70-00303A	1	O	
12	MEA UNIT-CASSETTE	JC97-01750A	1	O	ML-1710P
13	PBA MAIN-CONTROLLER	JC92-01550A	1	O	ML-1710P
14	CBF HARNESS-ENGINE	JC39-00240A	1	O	ML-1710P
15	FAN-DC_HUMMINGBIRD	JC31-00027A	1	O	
16	MEA ETC-TR	JC97-01793A	1	O	
16-1	ROLLER-TRANSFER ROLLER	JC66-00528A	1	O	
16-2	GEAR-TRANSFER	JC66-00395A	1	O	
16-3	PPR-SPACER_TR	*	2	X	
17	MEA UNIT-TONER CART_DOM_1K	*	1	X	
18	CBF HARNESS-PANEL	JC39-00244A	1	O	
19	SHIELD-P-ENGINE	*	1	X	
20	BRACKET-P-INLET	JC61-00601A	1	O	

ITSpares.eu

8.2 Frame Unit Assembly

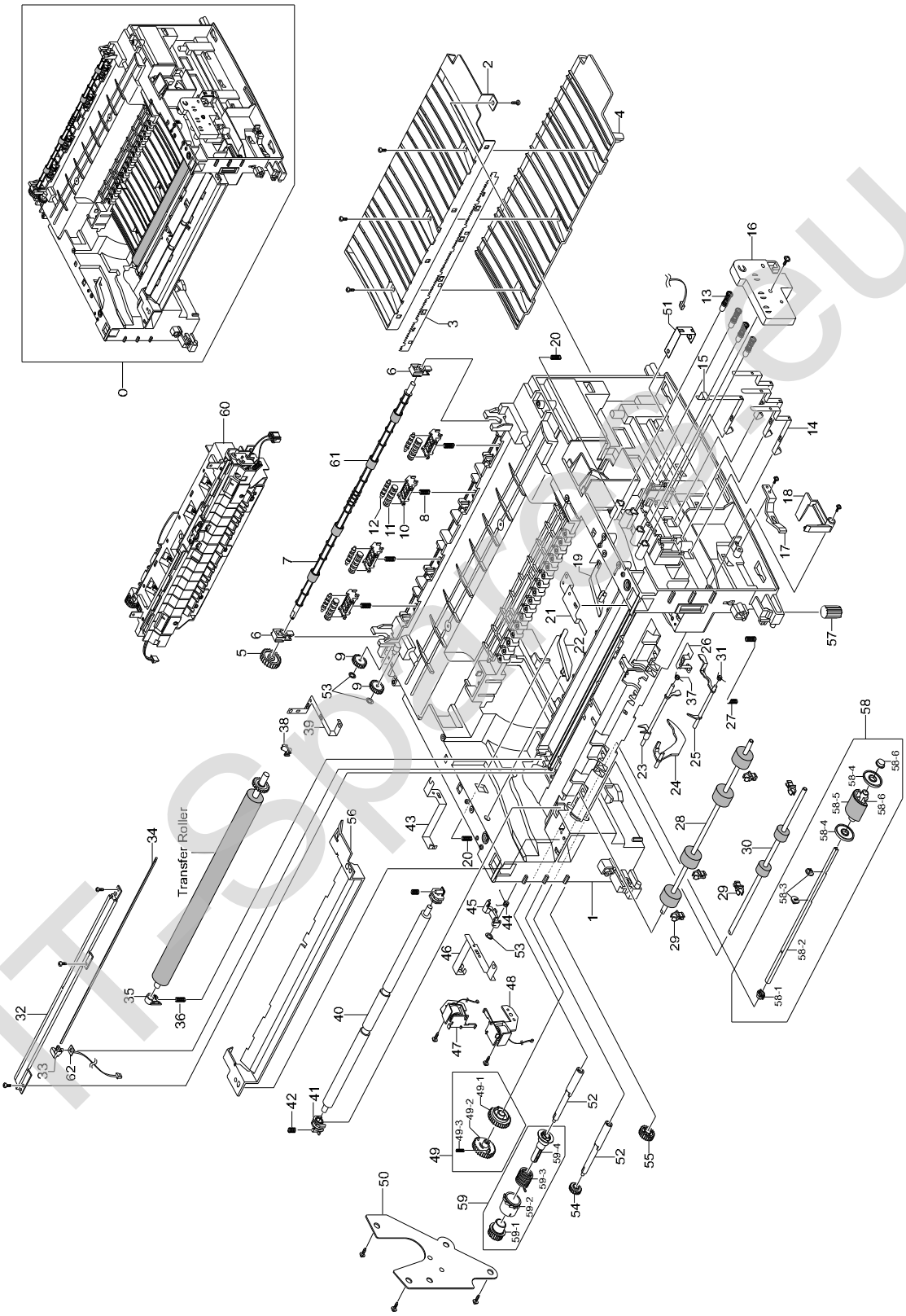

ITSPARTS.eu

Frame Unit Assembly Parts List

SA : Service Available
O : Service available **X** : Service not available

No.	Description	SEC.Code	Q'ty	SA	Remark
0	ELA UNIT-FRAME LOWER, 220V	JC96-02734A	1	O	ML-1710P
1	FRAME-M-BASE	*	1	X	
2	GUIDE-P-TR	JC61-00607A	1	O	
3	PLATE-P-SAW	JC61-00604A	1	O	
4	GUIDE-M-TR RIB	JC61-00594A	1	O	
5	GEAR-EXIT F/DOWN	*	1	X	
6	MEC-BEARING,EXIT	*	2	X	
7	ROLLER-EXIT F/DOWN	JC66-00378A	1	O	
8	SPRING-CS	6107-001163	4	O	Spring Exit
9	PMO-GEAR_EXIT_DRV16	*	2	X	
10	HOLDER-M-EXIT F/DOWN	JC61-00582A	4	O	
11	PMO-ROLLER_EXIT,MAIN	*	4	X	
12	PMO-ROLLER_EXIT,FR	*	4	X	
13	MEC-TERMINAL	JC75-00049A	4	O	
14	IPR-P-TERMINAL CON	JC70-00312A	3	O	
15	IPR-P-TERMINAL CR	JC70-00313A	1	O	
16	HOUSING-TERMINAL	JC61-00592A	1	O	
17	PMO-LOCKER CST	JC72-00983A	2	O	
18	PMO-ACTUATOR CVR OPEN	JC72-00974A	1	O	
19	PMO-PLATE GUIDE DEVE_R	JC72-00985A	1	O	
20	SPRING ETC-GUIDE DEVE	*	2	X	
21	IPR-P-GROUND_GUIDE PAPER	JC70-00458A	1	O	
22	PMO-PLATE GUIDE DEVE_L	JC72-00984A	1	O	
23	PMO-ACTUATOR FEED	JC72-00976A	1	O	
24	PMO-ACTUATOR EMPTY	JC72-00975A	1	O	
25	PMO-ACTUATOR MANUAL	JC72-00977A	1	O	
26	IPR-P-GROUND_EARTH TR	*	1	X	
27	SPRING-ETC	6107-001162	1	O	
28	ROLLER-FEED ROLLER 1	*	1	X	
29	PMO-BUSHING FEED	*	5	X	
30	ROLLER-FEED	JC66-00598A	1	O	
31	SPRING-TS	*	1	X	Spring-act,Manual
32	IPR-P-EARTH TRANSFER	JC70-00307A	1	O	
33	HOLDER-PTL	JC61-00583A	1	O	
34	LENS-PTL	JC67-00027A	1	O	
35	BUSH-M-TR L	JC61-00588A	1	O	
36	SPRING ETC-TR L HAWK	*	1	X	
37	SPRING-TS	*	1	X	Spring-act,Feed
38	PMO-BUSHING_TR(L)	JC72-00102A	1	O	
39	IPR-P-GROUND_FUSER	JC70-00310A	1	O	
40	SHAFT-FEED IDLE	JC66-00527A	1	O	
41	BUSH-M-FEED IDLE	*	2	X	
42	SPRING ETC-TR	*	2	X	Spring Feed Idle
43	IPR-P_GROUND_DRIVE2	JC70-00335A	1	O	
44	SPRING-TS	6107-001170	1	O	Spring-cam Pick-up
45	CAM-M-PICK_UP	JC66-00377A	1	O	
46	IPR-P-GROUND_DRIVE	JC70-00308A	1	O	
47	SOLENOID-HB (PICK-UP)	JC33-00009A	1	O	
48	SOLENOID-HB (MANUAL)	*	1	X	
	continue on the next page.				

ITSpares.eu

Frame Unit Assembly Parts List(Cont.)

SA : Service Available
O : Service available X : Service not available

No.	Description	SEC.Code	Q'ty	SA	Remark
49	AS-GEAR PICK_UP	JC81-01692A	1	O	
49-1	PMO-GEAR PICK_UP B	JC72-00980A	1	O	
49-2	PMO-GEAR PICK_UP A	JC72-00979A	1	O	
49-3	SPRING-CS	*	1	X	Spring-Pick-up gear
50	BRACKET-P-FEED	JC61-00602A	1	O	
51	IPR-P-GROUND_TR	JC70-00311A	1	O	
52	SHAFT-FEED	JC66-00398A	2	O	
53	RING-CS	*	3	X	
54	GEAR-FEED 2	JC66-00394A	1	O	
55	GEAR-IDLE 23	JC66-00396A	1	O	
56	GUIDE-P-PAPER	JC61-00718A	1	O	
57	RMO-RUBBER_FOOT	*	2	X	
58	AS-PICK UP	JC81-01693A	1	O	
58-1	BUSH-M-PICK_UP L	*	1	X	
58-2	SHAFT-P-PICK_UP	*	1	X	
58-3	STOPPER-PICK_UP	*	2	X	
58-4	PMO-IDLE PICK_UP	JC72-00982A	2	O	
58-5	SPONGE-ROLLER PICK_UP	JC72-01231A	1	O	
58-6	BUSH-M-PICK_UP R	JC61-00587A	1	O	
58-7	HOUSING-M-PICK_UP	JC61-00591A	1	O	
59	MEA UNIT-CLUTCH	JC97-01788A	1	O	
59-1	GEAR-FEED 1	JC66-00393A	1	O	
59-2	PMO-COLLAR_SPRING	JC72-00978A	1	O	
59-3	SPRING-TS	*	1	X	
59-4	PMO-HUB CLUTCH	JC72-00981A	1	O	
60	AS-FUSER 220V	JC81-01690A	1	O	ML-1710P
61	RMO-RUBBER EXIT	*	4	X	
62	PBA MAIN-PTL	*	1	X	

IT-Spares.eu

8.3 Drive Unit Assembly

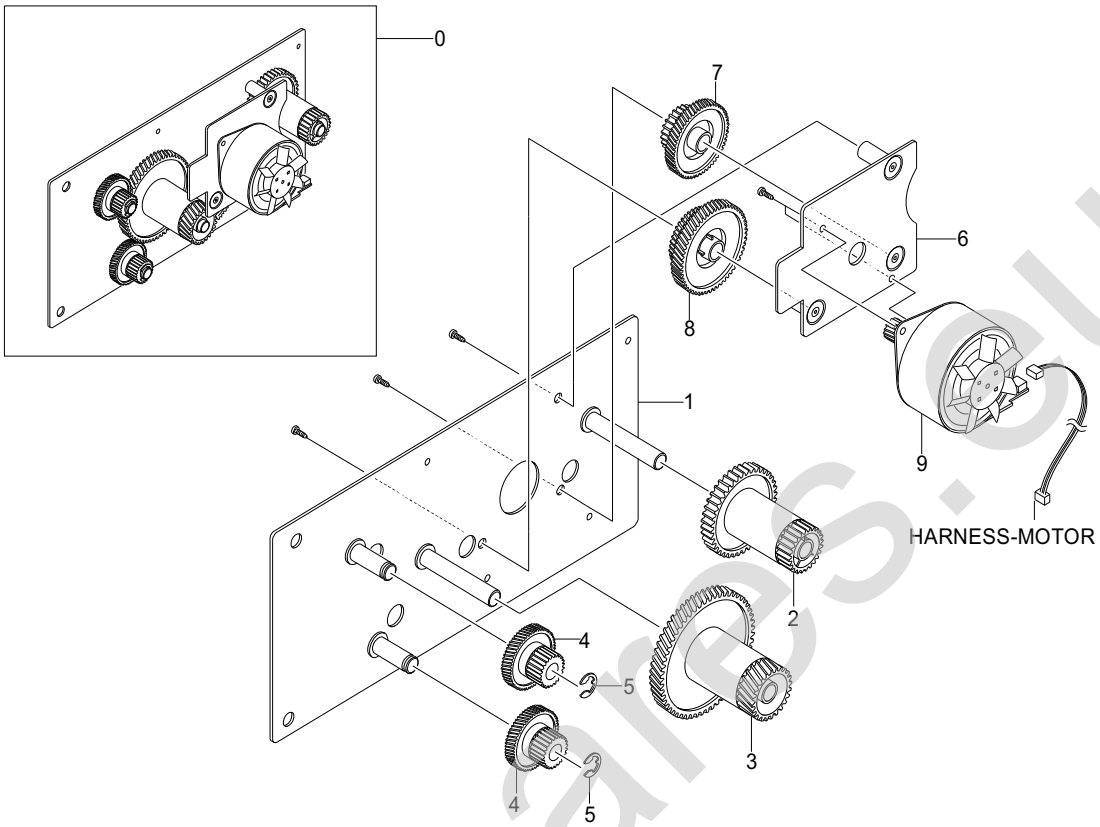

Drive Unit Assembly Parts List

SA : Service Available
O : Service available **X** : Service not available

No.	Description	SEC.Code	Q'ty	SA	Remark
0	ELA UNIT-RX DRIVE	JC96-02733A	1	O	
1	BRACKET-P-GEAR 1400	*	1	X	
2	GEAR-RDCN 53/26	*	1	X	
3	GEAR-RDCN 113/33	*	1	X	
4	GEAR-RDCN 57/18	*	2	X	
5	RING-E	*	2	X	
6	BRACKET-P-MOTOR 1400	*	1	X	
7	GEAR-RDCN 103/41	JC66-00390A	1	O	
8	GEAR-RDCN 90/31	JC66-00392A	1	O	
9	MOTOR STEP-HUMMINGBIRD	JC31-00028A	1	O	
10	PMO-IMPELLER_DRV	*	1	X	

IT-Spares.eu

8.4 Cassette Unit Assembly

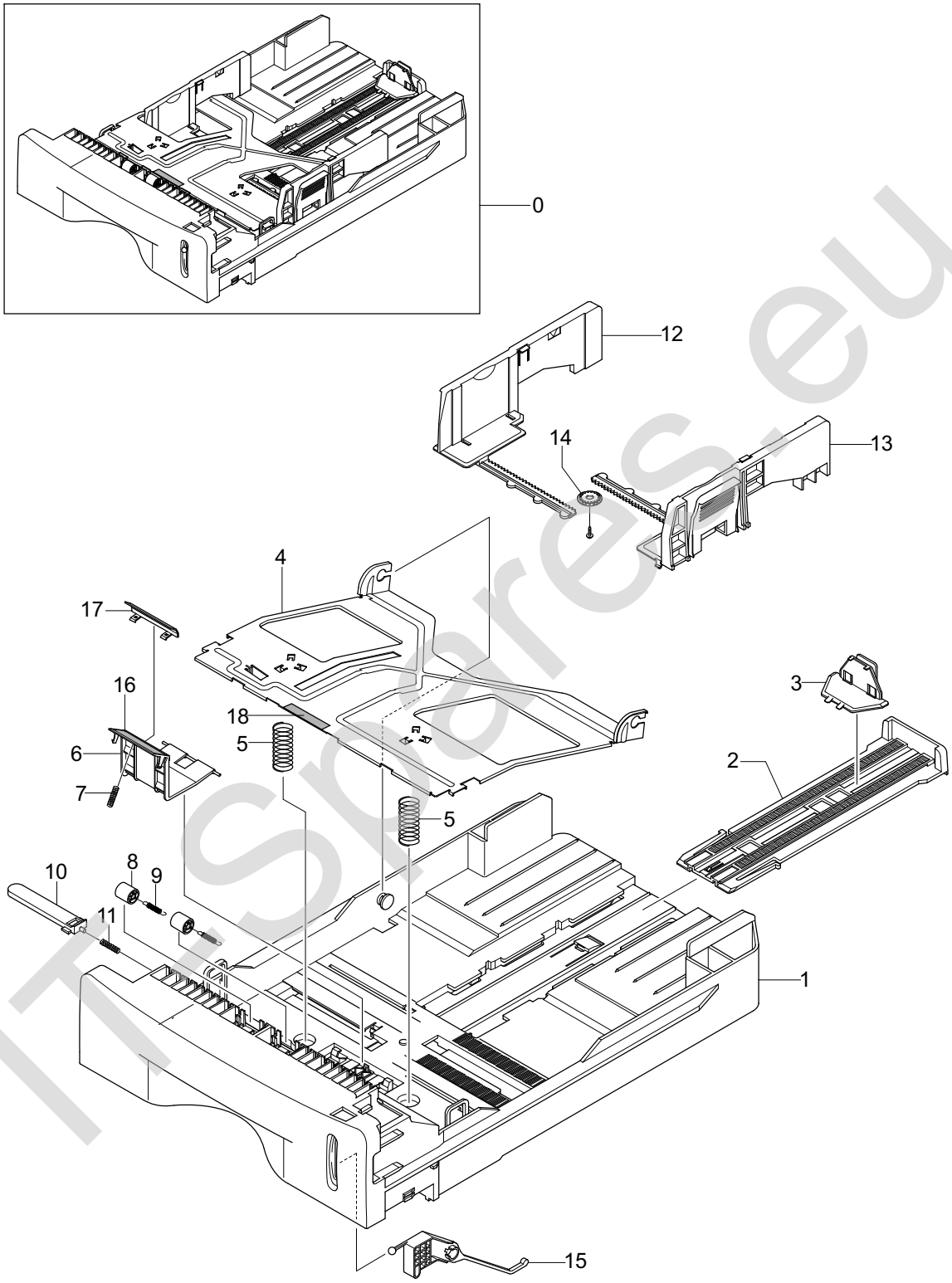

ITSpares.eu

Cassette Unit Assembly Parts List

SA : Service Available
O : Service available X : Service not available

No.	Description	SEC.Code	Q'ty	SA	Remark
0	MEA UNIT-CASSETTE	JC97-01750A	1	O	ML-1710P
1	FRAME-M-CASSETTE	*	1	X	ML-1710P
2	PMO-EXTENSION LARGE	JC72-00970A	1	O	
3	PMO-EXTENSION SMALL	JC72-00971A	1	O	
4	PLATE-P-KNOCK_UP	*	1	X	
5	SPRING-CS	*	2	X	
6	HOLDER-M-PAD	*	1	X	
7	SPRING ETC-EXIT ROLL FD	*	1	X	
8	ROLLER-M-IDLE FEED	*	2	X	
9	SPRING-ES	*	2	X	
10	PMO-PLATE_LOCKER	*	1	X	
11	SPRING ETC-LOCKER,PLATE	*	1	X	
12	ADJUST-M-CASSETTE_L	JC70-00300A	1	O	
13	ADJUST-M-CASSETTE_R	JC70-00301A	1	O	
14	GEAR-PINION	*	1	X	
15	INDICATOR-M-LEVER INDICATOR	JC64-00040A	1	O	
16	RPR-FRICTION PAD	JC73-00140A	1	O	
17	IPR-PLATE PAD	*	1	X	
18	RPR-PAD CASSETTE	*	3	X	

IT-Spares.eu

8.5 Fuser Unit Assembly (ML-1710P)

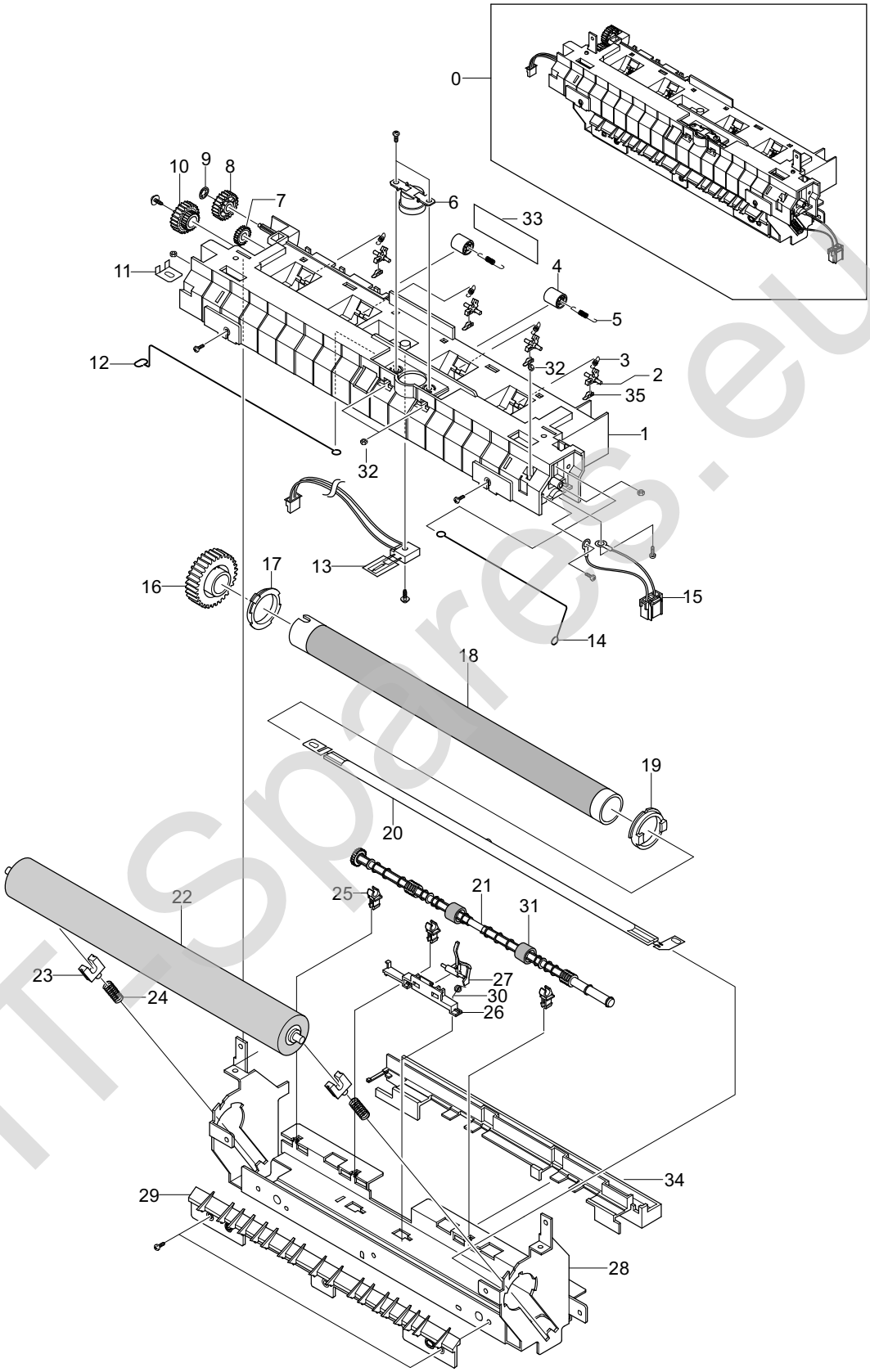

ITSpares.eu

Fuser Unit Assembly Parts List(ML-1710P)

SA : Service Available
O : Service available X : Service not available

No.	Description	SEC.Code	Q'ty	SA	Remark
0	AS-FUSER 220V	JC81-01690A	1	O	220V
1	COVER-M-FUSER	*	1	X	
2	HOLDER-M-PLATE CLAW	*	4	X	
3	SPRING ETC-CLAW	*	4	X	
4	PMO-ROLLER EXIT	*	2	X	
5	SPRING ETC-FUSER EXIT	*	2	X	
6	THERMOSTAT-150	JC47-00005A	1	O	
7	PMO-GEAR_EXIT_DRV16	*	1	X	
8	GEAR-IDLE 23	*	1	X	
9	RING-CS	*	1	X	
10	GEAR-RDCN 25/15	JC66-00397A	1	O	
11	IPR-ELECTRODE_LAMP	*	1	X	
12	ELECTRODE-WIRE_L	*	1	X	
13	THERMISTOR-NTC	1404-001298	1	O	
14	ELECTRODE-WIRE_R	*	1	X	
15	CBF HARNESS-FUSER 220V	JC39-00238A	1	O	BLACK
16	GEAR-FUSER, Z37	JC66-00564A	1	O	
17	BUSH-M-HR L	*	1	X	
18	ROLLER-HEAT	JC66-00601A	1	O	
19	BUSH-M-HR R	JC61-00590A	1	O	
20	LAMP-HALOGEN	4713-001183	1	O	220V
21	ROLLER-M-EXIT F/UP	*	1	X	
22	ROLLER-PRESSURE	JC66-00600A	1	O	
23	BEARING-PRESSURE/R	*	2	X	
24	SPRING-CS	*	2	X	
25	PMO-BUSHING TX	*	3	X	
26	HOLDER-ACTUATOR	*	1	X	
27	PMO-ACTUATOR_EXIT	JC72-00987A	1	O	
28	IPR-P-FRAME_FUSER	*	1	X	
29	GUIDE-M-INPUT	*	1	X	
30	SPRING-TS	*	1	X	
31	RMO-RUBBER_EXIT	*	2	X	
32	NUT-HEXAGON	*	5	X	
33	LABEL(P)-CAUTION, HOT_FUSER	*	1	X	
34	PMO-FUSER_EXIT	*	1	X	
35	PLATE-P-CLAW	*	4	X	

ITSpares.eu

Memo

IT-Spares.eu